MONTGOMERY™

1/2" Pressure Balanced Tub / Shower Mixer set with Stops

MO34SL7

L1

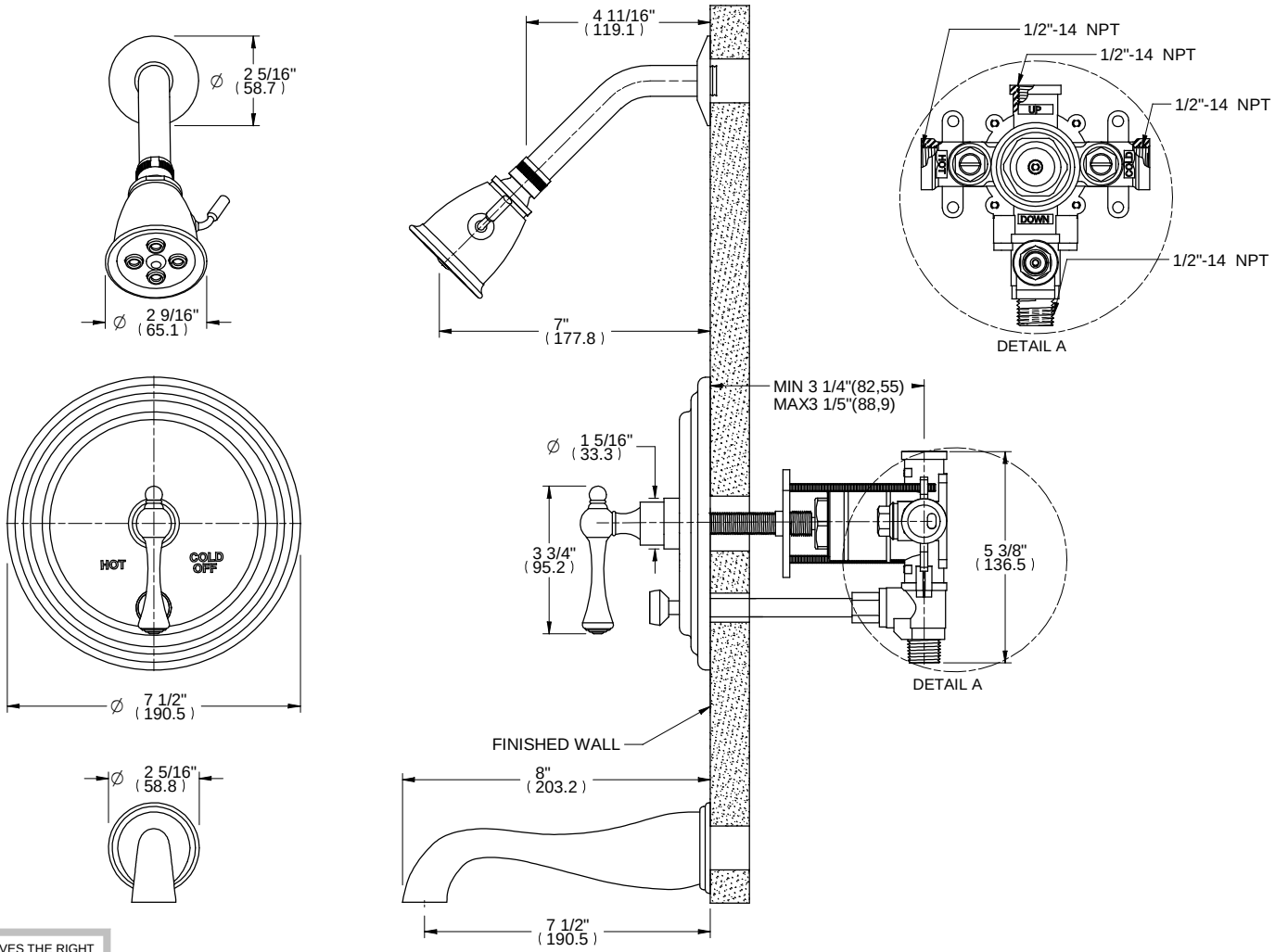

ALTMANS RESERVES THE RIGHT TO MODIFY AND CHANGE SPECIFICATIONS AT ANY TIME.PLEASE VERIFY DIMENSIONS PRIOR TO INSTALLATION.

Features

Available in All Finishes

All Brass Construction

Through-Hole Specifications

DIMENSIONS SHOWN TO NEAREST 1/16"