NUVA™

Complete Deck Set

NU20C62

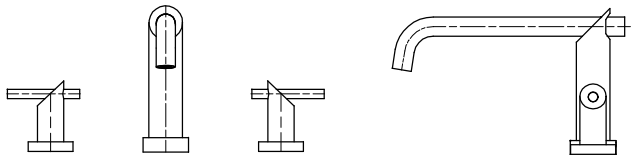

L1

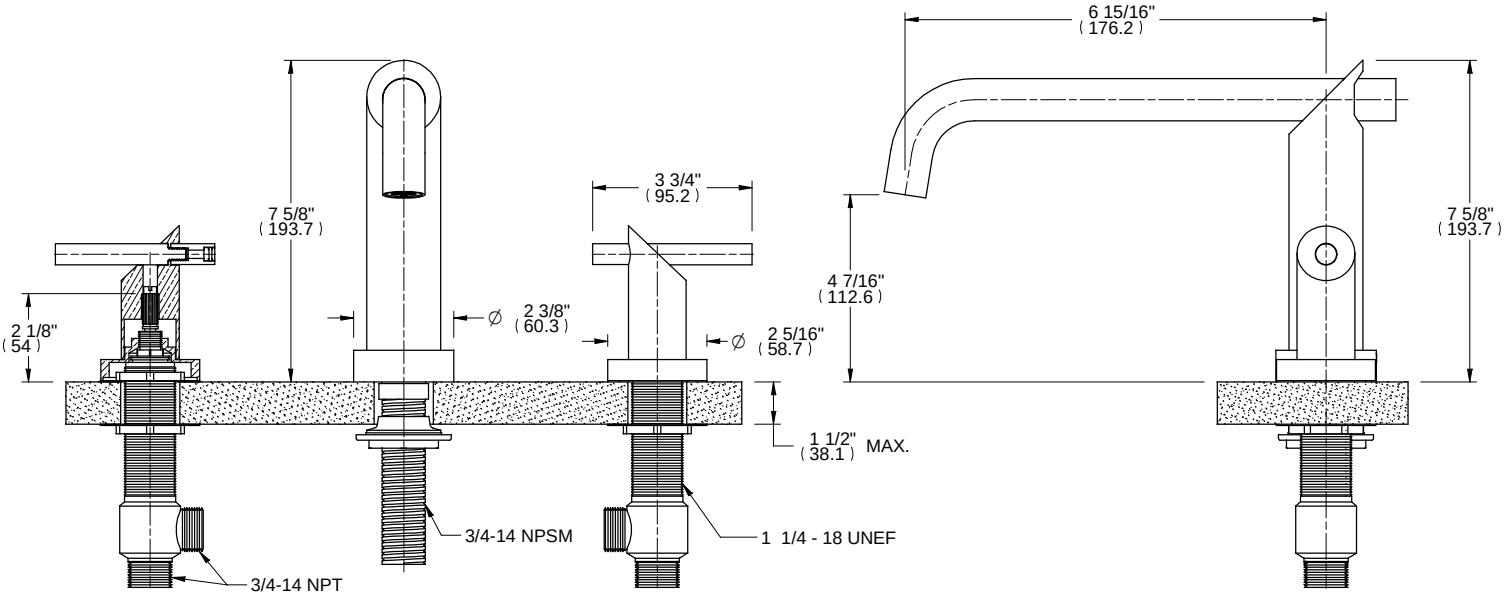

ALTMANS RESERVES THE RIGHT TO MODIFY AND CHANGE SPECIFICATIONS AT ANY TIME.PLEASE VERIFY DIMENSIONS PRIOR TO INSTALLATION.

Features

Available in All Finishes
Brass Construction
1/4 Turn Ceramic Disc Cartridge

Through-Hole Specifications

Spout: Ø 1 1/2" Max.
Valve: Ø 1 1/2" Max.

DIMENSIONS SHOWN TO NEAREST 1/16"