SINK SPECIFICATIONS

Platinum Series

BLANCOWAVE PLUS™ 1-1/2 PLUS BOWL Undermount

Model 511-750

BLANCO

FEATURED MODEL

511-750 10" & 6-3/4" bowl depths

ADDITIONAL MODELS

511-749 Left side large bowl, 8" & 6-3/4" bowl depths
511-749R Right side large bowl, 6-3/4" & 8" bowl depths
511-750R Right side large bowl, 6-3/4" & 10" bowl depths

FEATURES

- 18 gauge, 304 series stainless steel
- 18/10 chrome/nickel content
- Long-lasting, easy-to-clean, satin polished finish
- Rear drain placement

CODE/STANDARDS COMPLIANCE

ASME 112.19.3-00
IAPMO/UPC listed

OPTIONAL ACCESSORIES

Sink Grids: 511-920, 511-921
Colanders: 215-651, 510-889, 508-802
Plate Stack: 508-811

WARRANTY

Blanco America's Platinum Series sinks feature a "NO HASSLE" LIMITED LIFETIME WARRANTY to be free of all manufacturing defects under normal use. See our complete warranty for details.

While Blanco America endeavors to provide accurate information, all dimensions are nominal, cannot be guaranteed, and are subject to change or cancellation. Blanco America assumes no responsibility for use of superseded or voided specifications.

PRODUCT SPECIFICATION

Undermount sink to be 1-1/2 bowl design, 31-1/2" in length and 20-7/8" in front-to-back depth. Sink to be made from 18 gauge, 304 series stainless steel, with 18/10 chrome/nickel content and satin polished finish. Sink to feature rear drain placement. Sink to be Blanco Model 511-750, with large bowl depth of 10" and small bowl depth of 6-3/4".

MODEL 511-750

NOMINAL DIMENSIONS

MODEL	OVERALL	CUTOUT SIZE	BOWL DEPTH LEFT	BOWL DEPTH RIGHT	DRAIN DIAMETER
511-750	31-1/2 x 20-7/8	Template provided with approximate 1/8" reveal	10	6-3/4	3-1/2

DXF cutout templates available on our web site or this specification CD.

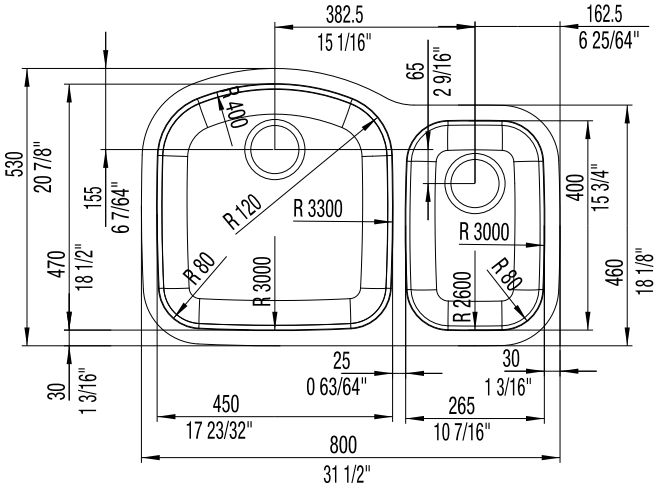

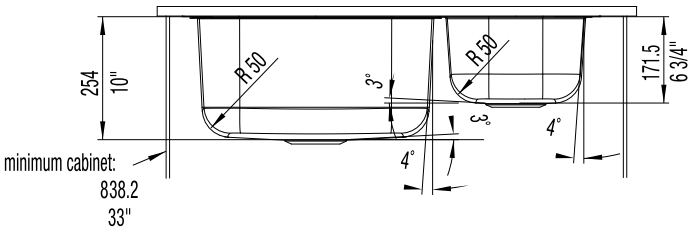

JOB INFORMATION

Job Name: _____

Contact: _____

Date Specified: _____

Specifier: _____

Contractor: _____

BLANCO AMERICA
800.451.5782
www.blancoamerica.com

© 2006 BLANCO AMERICA