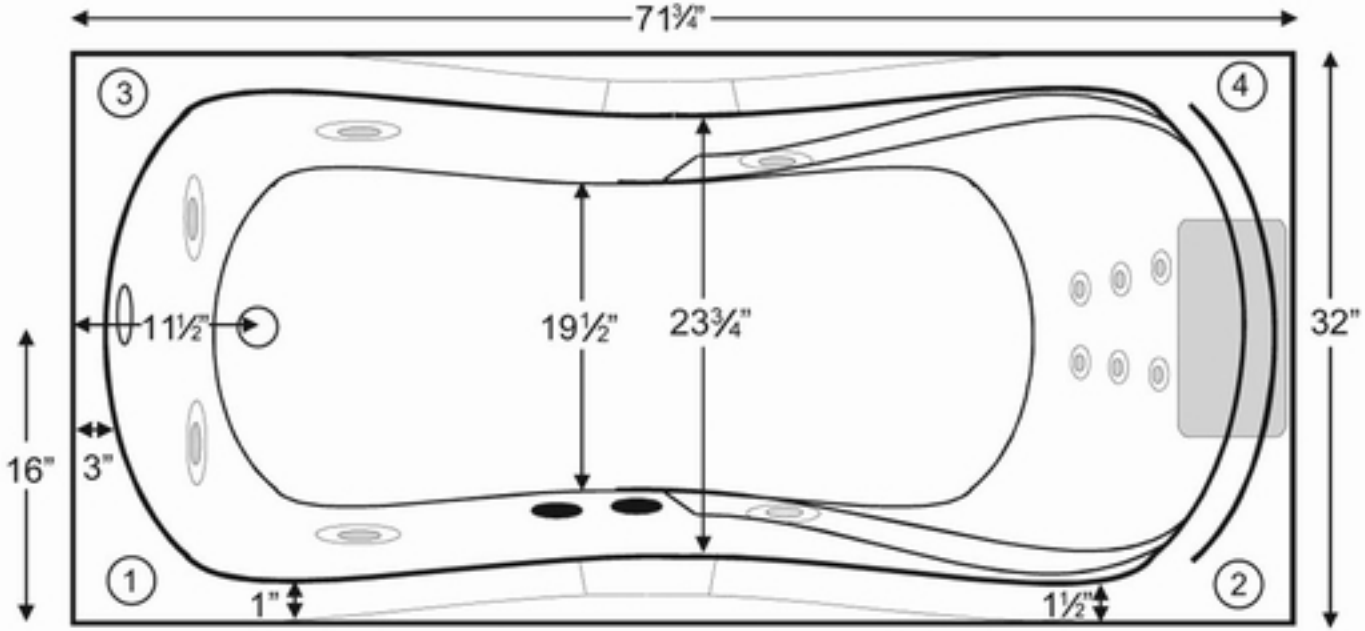
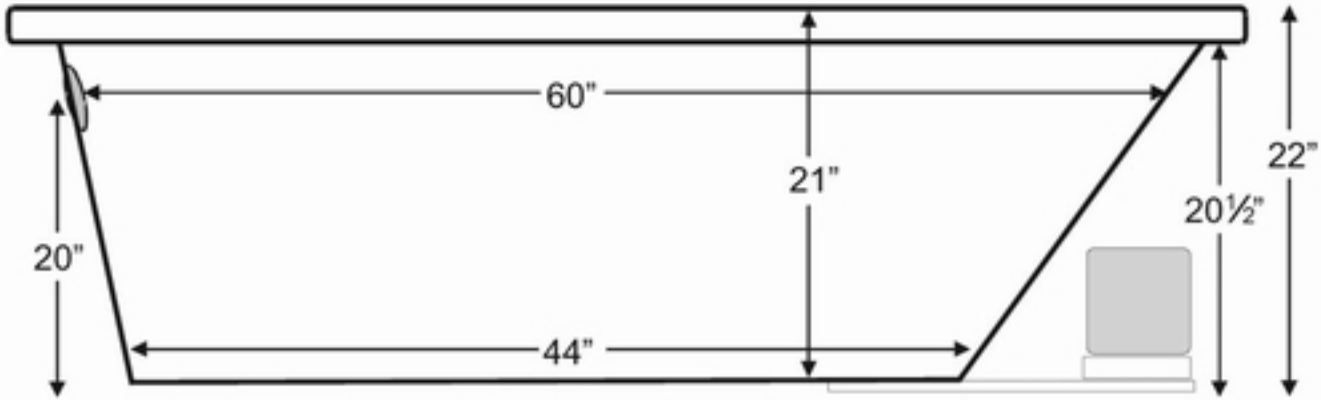
Ultra-Therapy Package